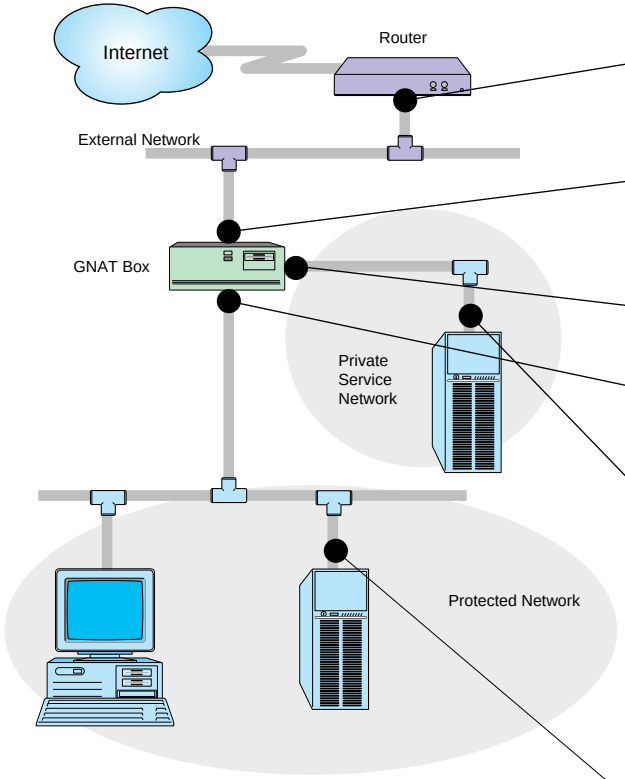

	IP Number	Netmask	Device
Default Route			
External Network Interface			
PSN Interface			
Protected Network Interface			

Tunnel Targets

PSN Hosts

IP Number	Netmask

Internal Hosts

IP Number	Netmask

Tunnels

	IP Number	Port
From		
To		
From		
To		
From		
To		
From		
To		

Global Technology Associates, Inc.
3504 Lake Lynda Drive, Suite 160
Orlando, FL 32817 USA
Sales: 1-800-775-4GTA

Phone: 1-407-380-0220
Fax: 1-407-380-6080
Email: gb-sales@gta.com
Http: http://www.gnatbox.com